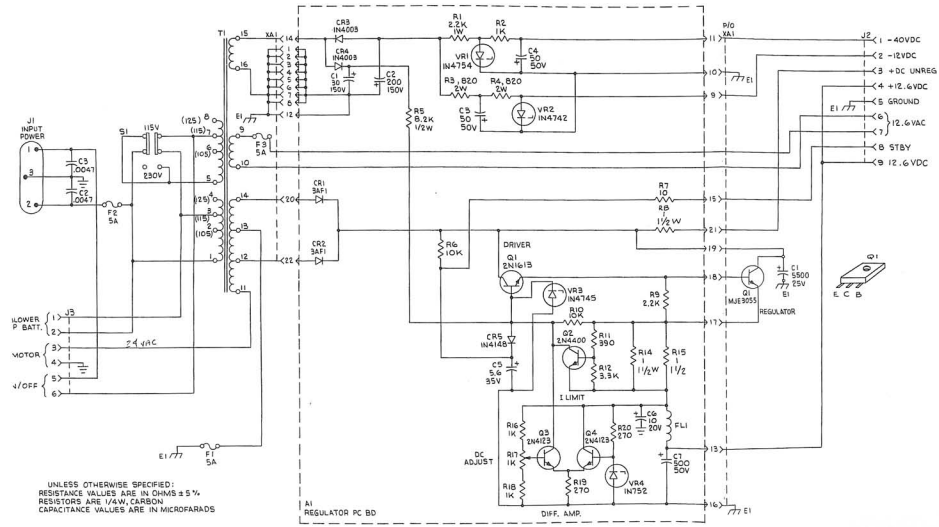

UNLESS OTHERWISE SPECIFIED:
RESISTANCE VALUES ARE IN OHMS ± 5%
RESISTORS ARE 1/4W, CARBON
CAPACITANCE VALUES ARE IN MICROFARADS

Figure 10 - 2. Power Supply Module A5, Schematic Diagram